Befestigungsbride Typ BFB 1

Bestehend aus

Aluminiumguss mit rostfreien Schrauben A2, inkl.Befestigungsschrauben

Bei Bestellung angeben

Befestigungsart
Kabeldurchmesser
Kabeltyp

Separat zu bestellen sind:

Stützkreuz Typ STKR
Profilschienen Typ PS
Nutensteine Typ PSVN

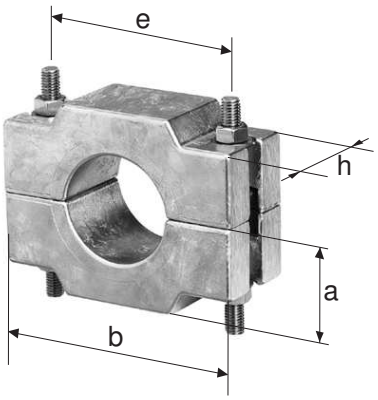

Grösse	a mm	b mm	e mm	h mm	Schrauben mm	Zeichnung
1053 - 1085	60	160	130	60	M 12 x 160	S1474-4
2080 - 2100	65	175	145	60	M 12 x 170	S1475-4
3095 - 3120	75	200	170	60	M 12 x 190	S1476-4
4115 - 4145	90	245	210	80	M 16 x 220	S1477-4
5140 - 5160	100	255	220	100	M 16 x 240	S1478-4

Artikel-Nr.	Typ	Kabel-Ø mm	Artikel-Nr.	Typ	Kabel-Ø mm
88830	BFB1-1053	50.1 - 52.5	88323	BFB1-3108	105.1 - 107.5
88831	BFB1-1055	52.6 - 55.0	88324	BFB1-3110	107.6 - 110.0
88832	BFB1-1058	55.1 - 57.5	88325	BFB1-3113	110.1 - 112.5
88833	BFB1-1060	57.6 - 60.0	88326	BFB1-3115	112.6 - 115.0
88834	BFB1-1063	60.1 - 62.5	88327	BFB1-3118	115.1 - 117.5
88300	BFB1-1065	62.6 - 65.0	88328	BFB1-3120	117.6 - 120.0
88301	BFB1-1068	65.1 - 67.5	88329	BFB1-4115	112.6 - 115.0
88302	BFB1-1070	67.6 - 70.0	88330	BFB1-4118	115.1 - 117.5
88303	BFB1-1073	70.1 - 72.5	88331	BFB1-4120	117.6 - 120.0
88304	BFB1-1075	72.6 - 75.0	88332	BFB1-4123	120.1 - 122.5
88305	BFB1-1078	75.1 - 77.5	88333	BFB1-4125	122.6 - 125.0
88306	BFB1-1080	77.6 - 80.0	88334	BFB1-4128	125.1 - 127.5
88307	BFB1-1083	80.1 - 82.5	88335	BFB1-4130	127.6 - 130.0
88308	BFB1-1085	82.6 - 85.0	88336	BFB1-4133	130.1 - 132.5
88309	BFB1-2080	77.6 - 80.0	88337	BFB1-4135	132.6 - 135.0
88310	BFB1-2083	80.1 - 82.5	88338	BFB1-4138	135.1 - 137.5
88311	BFB1-2085	82.6 - 85.0	88339	BFB1-4140	137.6 - 140.0
88312	BFB1-2088	85.1 - 87.5	88340	BFB1-4143	140.1 - 142.5
88313	BFB1-2090	87.6 - 90.0	88341	BFB1-4145	142.6 - 145.0
88314	BFB1-2093	90.1 - 92.5	88342	BFB1-5140	137.6 - 140.0
88315	BFB1-2095	92.6 - 95.0	88343	BFB1-5143	140.1 - 142.5
88316	BFB1-2098	95.1 - 97.5	88344	BFB1-5145	142.6 - 145.0
88317	BFB1-2100	97.6 - 100.0	88345	BFB1-5148	145.1 - 147.5
88318	BFB1-3095	92.6 - 95.0	88346	BFB1-5150	147.6 - 150.0
88319	BFB1-3098	95.1 - 97.5	88347	BFB1-5153	150.1 - 152.5
88320	BFB1-3100	97.6 - 100.0	88348	BFB1-5155	152.6 - 155.0
88321	BFB1-3103	100.1 - 102.5	88349	BFB1-5158	155.1 - 157.5
88322	BFB1-3105	102.6 - 105.0	88350	BFB1-5160	157.6 - 160.0

Technische Änderungen jederzeit vorbehalten.

BRUGG CABLES Well connected. TERNA GROUP
BRUGG KABEL AG
Telefon +41 56 201 37 77 • info@bruggcables.com